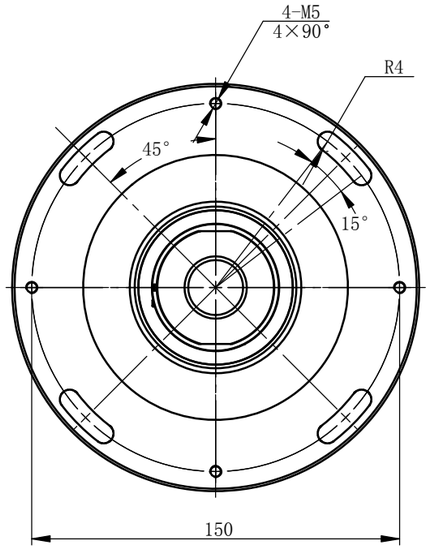

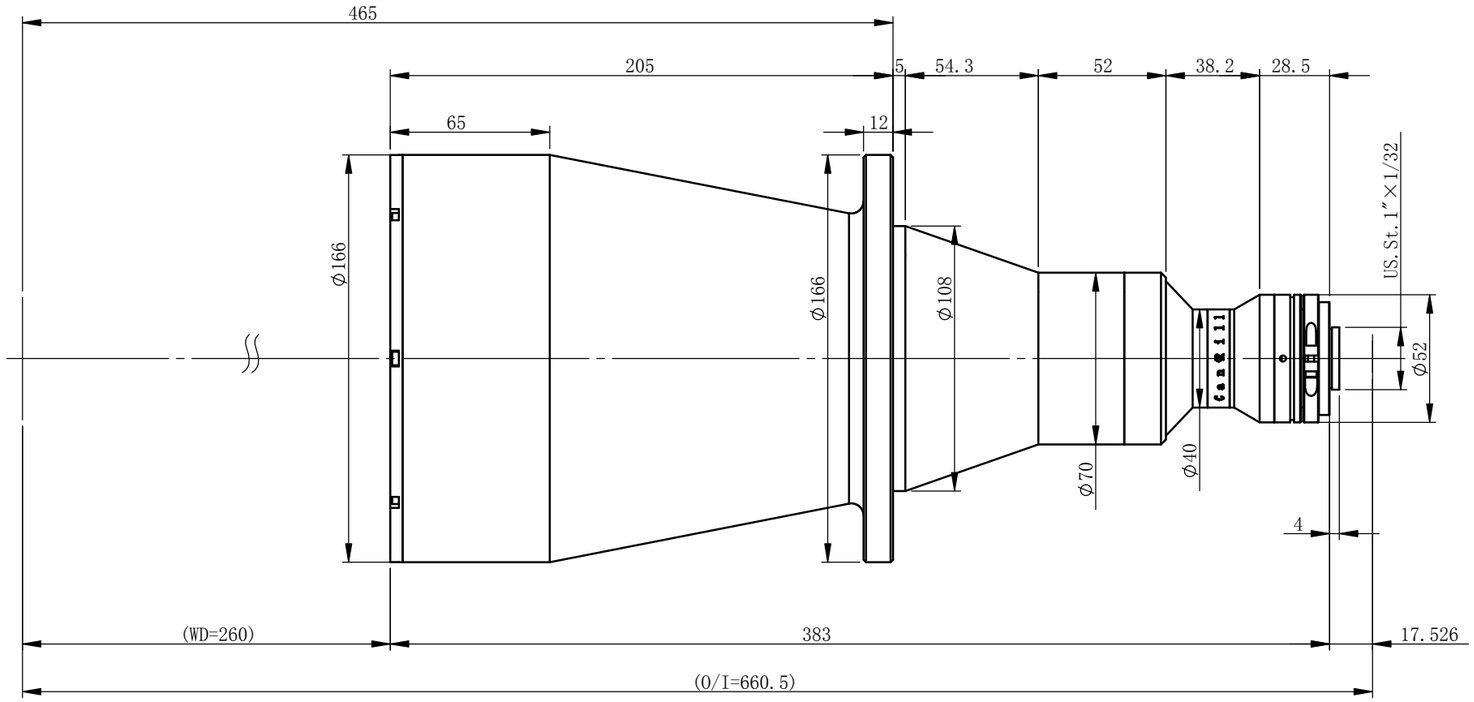

XF-PTL12216-C

Specification

Optical structure		Bi-Telecentric
Magnification		0.133
Object field of view		Φ121.8mm
Image field of view		Φ16.2mm
Working Distance		260mm±3%
Telecentricity		<0.04°(0.06°)
Depth of field		41.1mm
F#		F6.5
Resolution		32.4μm
MTF		>0.3@160lp/mm
Distortion		<0.026%(0.054%)
Detector type:		
1'	12.8×9.6	96.2×72.2mm
2/3'	8.45×7.07	63.5×53.2mm
1/1.8'	7.2×5.3	54.1×39.8mm
1/2'	6.4×4.8	48.1×36.1mm

XF-PTLAAABB-C/F/P/M-(L90E)

- **The fourth generation lens of Canrill**
- **Object FOV**
- **Image FOV**
- **The camera mount (M & P mount need specify BFL)**
- **90° Steering option**

Undefined tolerance(mm)		degree	File Name		
X.X	±0.2	±30min	XF-PTL12216-C-外形尺寸-EN		
X.XX	±0.02		Drawing Name		
X.XXX	±0.005	Drawing Size: A3			
	Sign	Data/Ver.	Material	Ratio	Product Name
Design				1:5	
Modify1			Qty		Canrill OPTICS
Modify2			Total:	Page:	

All design and drawings are intellectual property of Canrill Optics, can not be copied without Canrill's authorization.